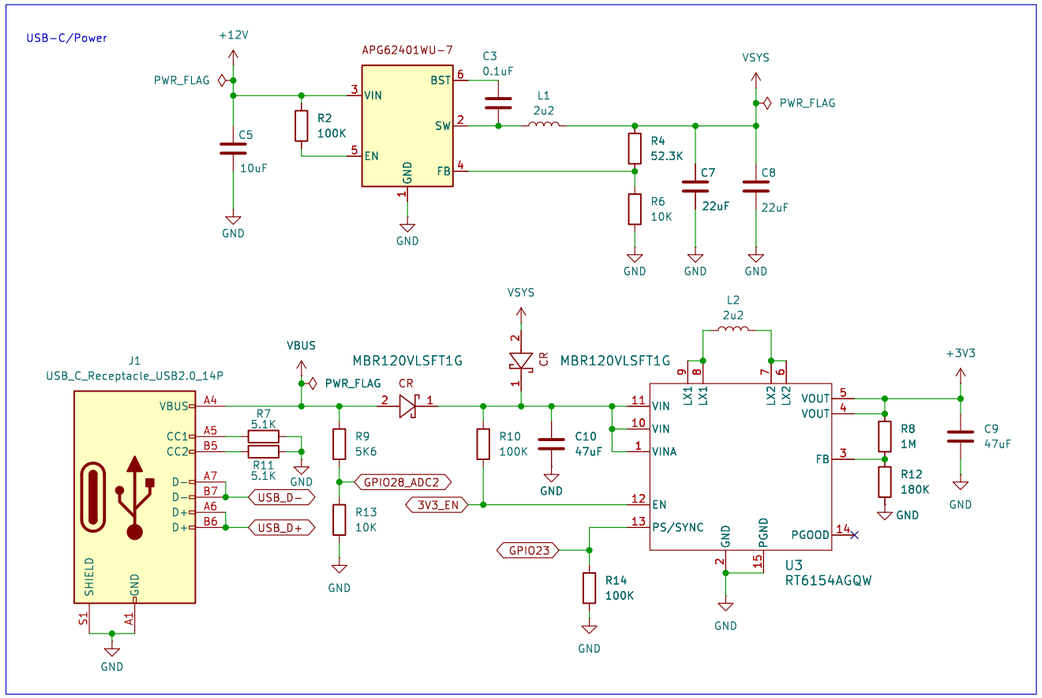


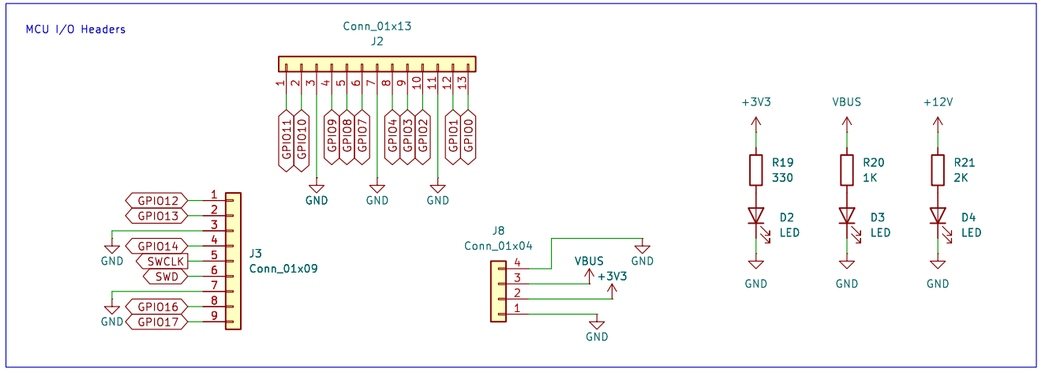


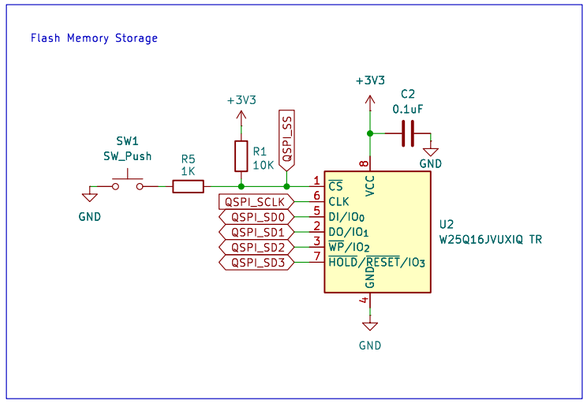


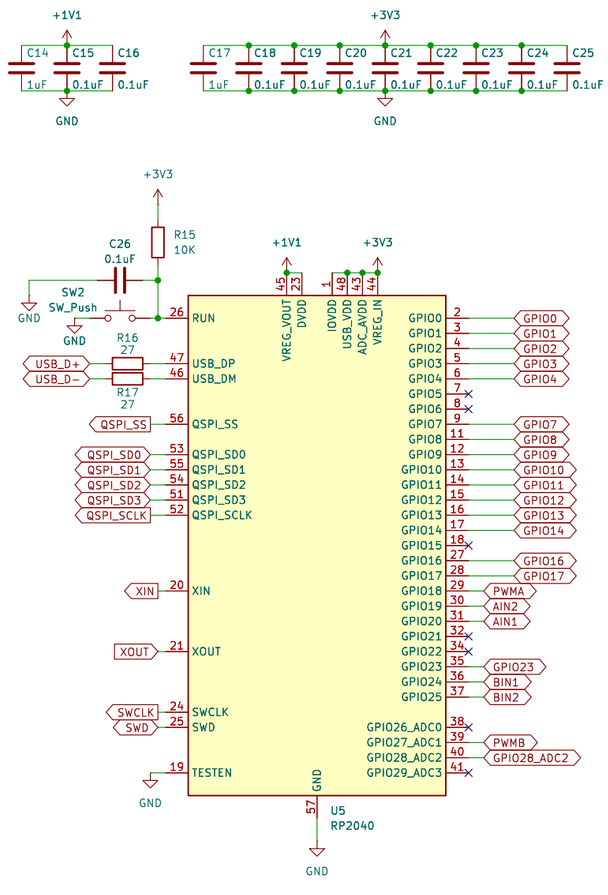


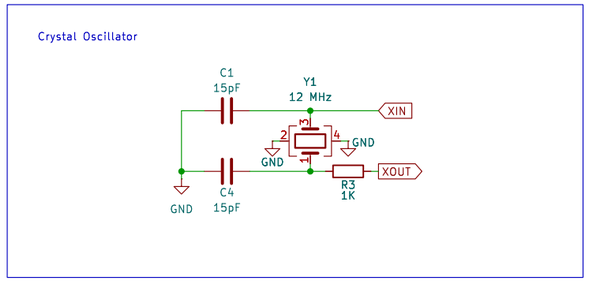


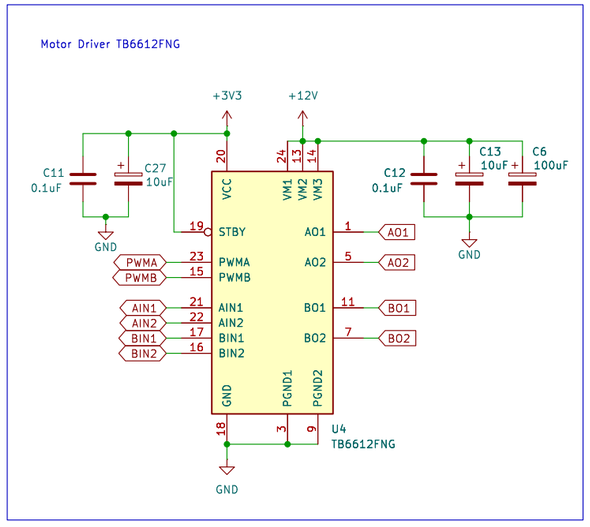


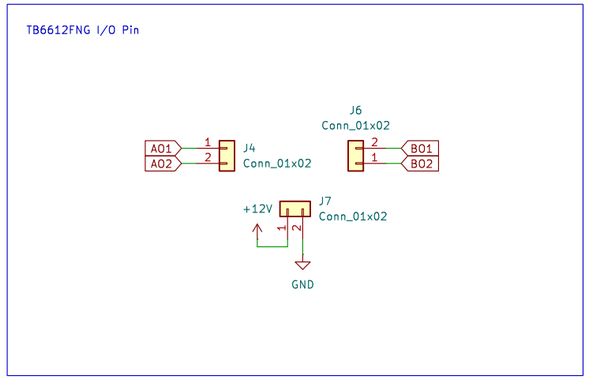


Sheet: /
File: RC Car Module.kicad_sch

**Title: Rukus Remote-Controlled Module**

| Size: User | Date: | Rev: |
|---|---|---|
| KiCad E.D.A. 9.0.6 | | Id: 1/1 |